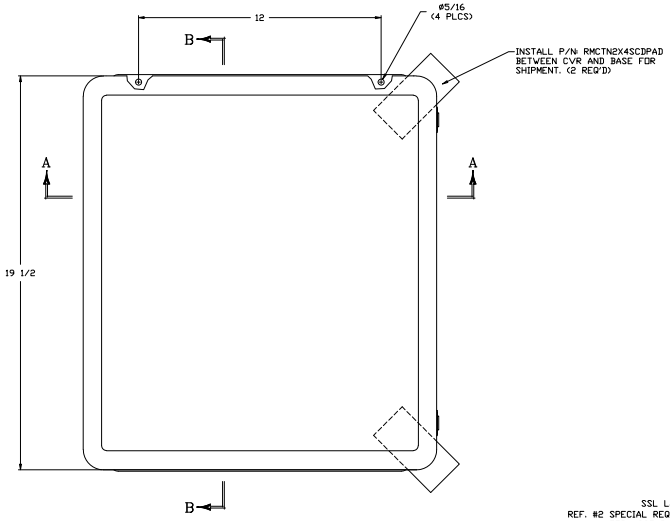

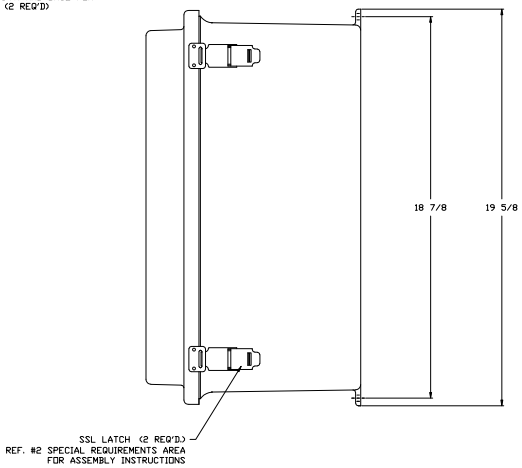

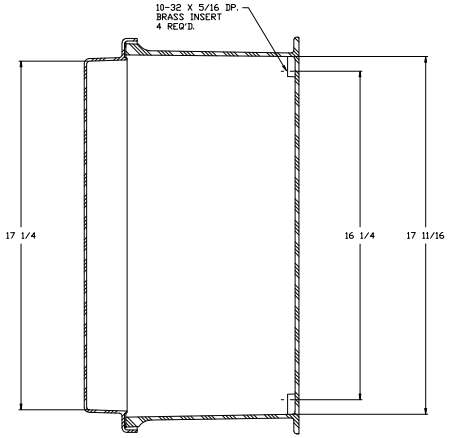

SECTION B–B

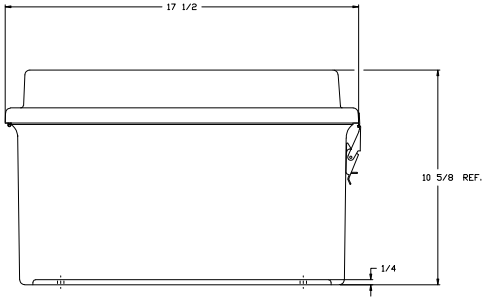

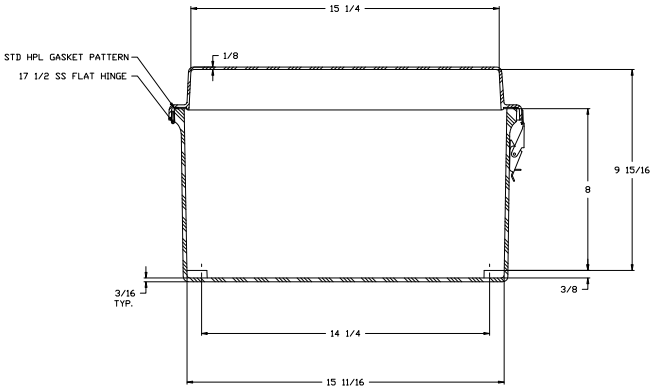

SECTION A–A

VSHFIDO#JHTXIJHP HQWV

ASSEMBLY

41,#QVWDDDWZ R#DI#XWFDUGERDUG#FV#HWZ HHQ#YU#QG#DVH IR U#KI#P HQW/#Q4JP FWQ5[7VFGSDG#UHI#R VWIRQ#QGIPDWHG RQ#UIQW,

S1,#R #QR WIDWFK#QFO#R U#KI#SP HQW

MOLDING

41,#R OG#Q#K KDH#U633;1

NOTES:

MODIFIED RJ1816HPL COLOR: WHITE (RR3008)					
UL/CSA: 1, 3, 4X, 6P, 12					
MATERIAL F.R. POLYESTER FIBERGLASS				DR. BY CC	DATE 10/29/08
LET.	REVISION RECORD	DATE	BY	CHD.	CHK. BY / DATE
A	REMOVE HW GASKET PATTERN & PLASTIC POSITIVE STOPS. ADD STD HPL GASKET PATTERN AND DOE CUT CARBERMAS STOPS BETWEEN CVR AND BASE.	4/6/10	LB		APD. BY / DATE
					SCALE DO NOT SCALE

TOLERANCES UNLESS SPECIFIED: DECIMAL ±.010; FRACTIONAL ± 1/32

STAHLIN ENCLOSURES
DIVISION OF HOFFMAN INDUSTRIES

BELDING,MICHIGAN 48809

CUSTOMER: CAMPBELL SCIENTIFIC

AutoCAD DWG FILE: 5355

PART NAME: ENCLOSURE

PART NO. 53551816